Dart Aerospace Ltd.

Date: Monday, 9/10/2007 1:19:06 PM
User: Kim Johnston

Split 2

Process Sheet

Customer	: CU-DAR001 Dart Helicopters Services	Drawing Name	: ARM
Job Number	: 34477		
Estimate Number	: 12884		
P.O. Number	: N/A	Part Number	: D3560044
This Issue	: 9/10/2007 S.O. No. : N/A	Drawing Number	: D3560 ~~UNDER REVIEW~~
Prsht Rev.	: NC	Project Number	: N/A
First Issue	: N/A Type : SMALL /MED FAB	Drawing Revision	: ~~B~~ C
Previous Run	: 32648	Material	: N/A
		Due Date	: 9/17/2007 Qty: 12 Um: Each
Written By	:		
Checked & Approved By	:		
Comment	: Est Rev:A New Issue 07.05.24 EC		

Additional Product

Job Number:

Seq. #:	Machine Or Operation:	Description :
1.0	M6061T6B0500X05000	6061-T6 Bar .50" x 5.0"

Comment: Qty.: 1.3598 f(s)/Unit Total : 16.3170 f(s)
6061-T6 Bar 0.50" x 5.00"
Batch: M105646 JNR 07/09/20 (12)

2.0	BAND SAW	BAND SAW

Comment: BAND SAW
Cut blanks 15.500" long JNR 07/09/20 (12)

3.0	HAAS1	HAAS CNC VERTICAL MACHINING #1

Comment: HAAS CNC VERTICAL MACHINING #1

1- Mill as per Folio FA696 Rev: M & Dwg D3560 Rev: C

2-C'sink 0.196" hole on manual mill as per dwg D3560

3-Deburr per dwg D3560 SF 07/09/22

4.0	QC2	INSPECT PARTS AS THEY COME OFF MACHINE

Comment: INSPECT PARTS AS THEY COME OFF MACHINE SF 07/09/22

5.0	QC8	SECOND CHECK

Comment: SECOND CHECK J.F. 07/09/23

Form: mprocess

Date: Monday, 9/10/2007 1:19:06 PM
User: Kim Johnston

Process Sheet

Customer: CU-DAR001 Dart Helicopters Services
Drawing Name: ARM

Job Number: 34477
Part Number: D3560044

Job Number:

Seq. #:	Machine Or Operation:	Description :
6.0	D35921	PLATE
Comment:	Qty.: 1.0000 Each(s)/Unit Total : 12.0000 Each(s) PLATE ~~B34260~~ B34478 = 5	PE 07.10.25 (5) ~~PE 07.10.10~~
7.0	LARGE FAB 1	LARGE FABRICATION RESOURCE 1
Comment:	LARGE FABRICATION RESOURCE 1 1-Weld assembly as per dwg D3560	PE 07.10.25 (5)
8.0	QC5	INSPECT WORK TO CURRENT STEP
Comment:	INSPECT WORK TO CURRENT STEP	07/10/26 x5
9.0	QC9	VISUAL WELDING INSPECTION
Comment:	VISUAL WELDING INSPECTION	PD 07-10-26 (5)
10.0	HAND FINISHING1	HAND FINISHING RESOURCE #1
Comment:	HAND FINISHING RESOURCE #1 Chemical Conversion Coat as per QSI 005 4.1	PE 07.10.26 (5)
11.0	POWDER COATING	POWDER COATING
Comment:	~~POWDER COATING~~ Powder Coat White Gloss (Ref: 4.3.5.1) as per QSI 005 4.3	07/10/26
12.0	QC3	INSPECT POWDER COAT/CHEMICAL CONVERSION
Comment:	INSPECT POWDER COAT/CHEMICAL CONVERSION	(5X) M.L 07/10/26
13.0	PACKAGING 1	PACKAGING RESOURCE #1
Comment:	PACKAGING RESOURCE #1 Identify and Stock Location: GA	PE 07.10.26 (5)

Date: Monday, 9/10/2007 1:19:06 PM
User: Kim Johnston

Process Sheet

Customer: CU-DAR001 Dart Helicopters Services

Drawing Name: ARM

Job Number: 34477

Part Number: D3560044

Job Number:

Seq. #:	Machine Or Operation:	Description :
14.0	QC21	FINAL INSPECTION/W/O RELEASE

(5)

Comment: FINAL INSPECTION/W/O RELEASE

D 07/10/06

Job Completion

LE 07.10.06

Form: process

DART AEROSPACE LTD	Work Order:	34477
Description: Arm	Part Number:	D3560-4
Inspection Dwg: D3560 Rev: B		Page 1 of 1

FIRST ARTICLE INSPECTION CHECKLIST

[X] First Article [ ] Prototype

Drawing Dimension	Tolerance	Actual Dimension	Accept	Reject	Method of Inspection	Comments
Ø0.507	+0.000/-0.001	.506	/			
Ø0.196	+0.005/-0.001	.197				
Ø1.000	+0.010/-0.001	1.003				
Ø0.900	+0.010/-0.001	.900				
0.500	+/-0.010	.494				
0.250	+/-0.010	.252				
0.275	+/-0.010	.277				
0.188	+/-0.010	.190				
2.000	+/-0.010	2.006				
1.750	+/-0.010	1.746				
1.702	+/-0.010	1.704				
Ø0.385 x 100°	+/-0.010 x 0.5°	.378				
0.250 Deep	+/-0.010	.241				

Measured by:	S.F	Audited by:	JF	Prototype Approval:	N/A
Date:	07/09/22	Date:	07/09/22	Date:	N/A

Rev	Date	Change	Revised by	Approved
A	07.01.17	New Issue	KJ/JLM	
B	07.06.13	Dimensions updated per Dwg Rev B	KJ/JLM	

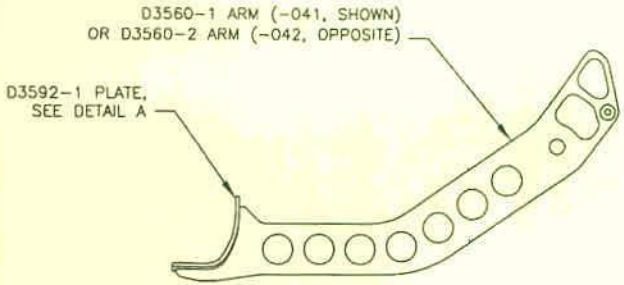

D3560-041 ARM WELDMENT (SHOWN),
D3560-042 ARM WELDMENT (OPPOSITE)

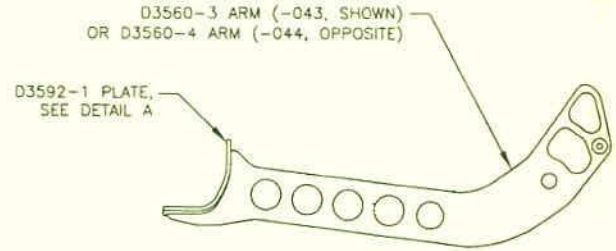

D3560-043 ARM WELDMENT (SHOWN),
D3560-044 ARM WELDMENT (OPPOSITE)

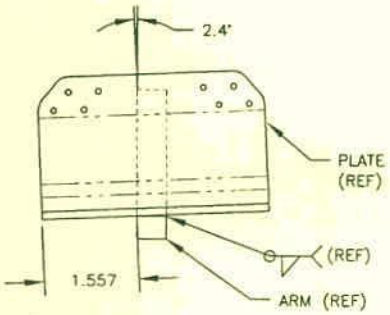

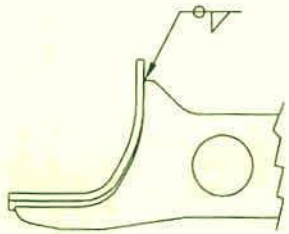

DETAIL A
(SCALE 1:1)

GENERAL NOTES
1) WELD PER QSI 004
2) FINISH: CHEMICAL CONVERSION COAT PER DART QSI 005 4.1
3) TOLERANCES ARE PER DART QSI 018 UNLESS OTHERWISE NOTED
4) ALL DIMENSIONS ARE IN INCHES

RELEASED
07.06.21

C	07.06.19	REMOVE POWDER COAT
B	07.01.15	REDESIGN AS WELDMENT, ADD POCKETS
A	06.09.25	NEW ISSUE

DESIGN	DRAWN BY	DART	DART AEROSPACE LTD. HAWKESBURY, ONTARIO, CANADA
CHECKED	APPROVED	DRAWING NO. D3560	REV. C SHEET 1 OF 3
DATE 07.06.19		TITLE ARM WELDMENT	SCALE 1:4

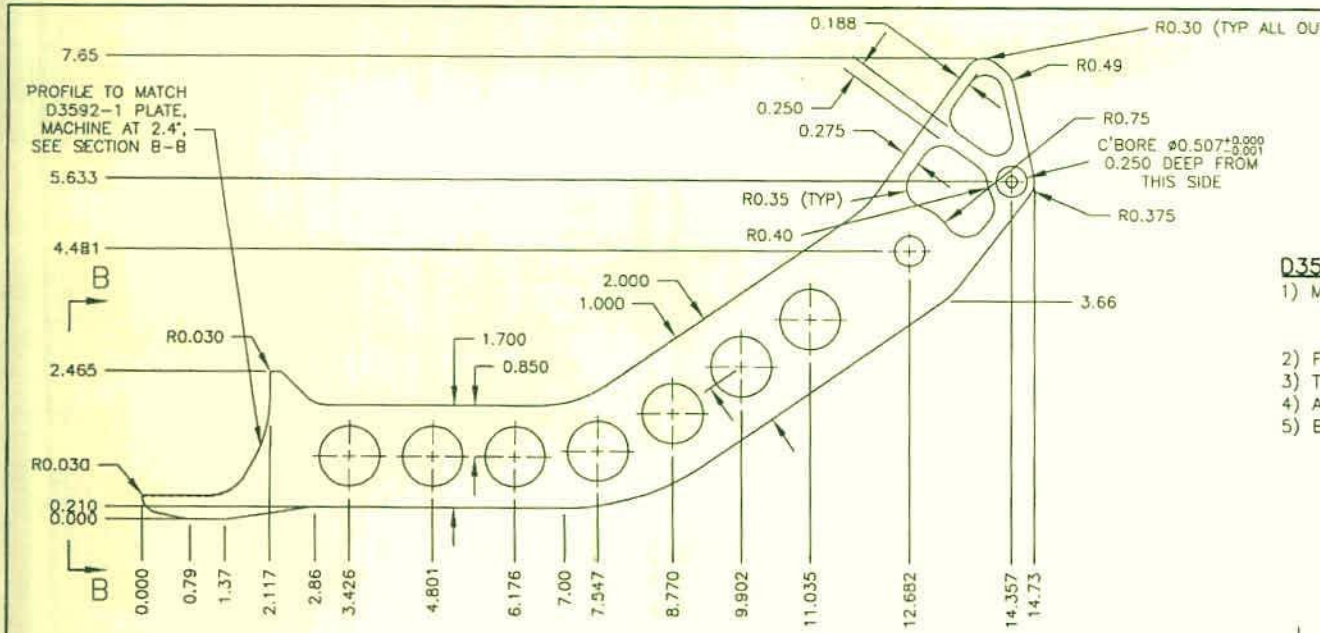

D3560-1 ARM (SHOWN), D3560-2 ARM (OPPOSITE)

1) MATERIAL: 6061-T6 ALUMINUM, 0.500 THICK (QQ-A-200/8 OR QQ-A-250/11, REF DART SPEC. M6061T6B0.500)
2) FINISH: NONE
3) TOLERANCES ARE PER DART QSI 018 UNLESS OTHERWISE NOTED
4) ALL DIMENSIONS ARE IN INCHES
5) BREAK ALL SHARP CORNERS 0.005 TO 0.015

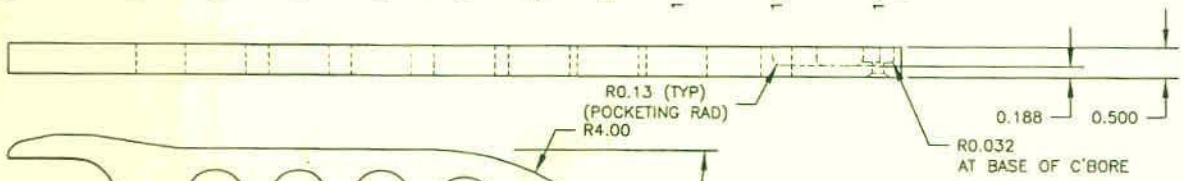

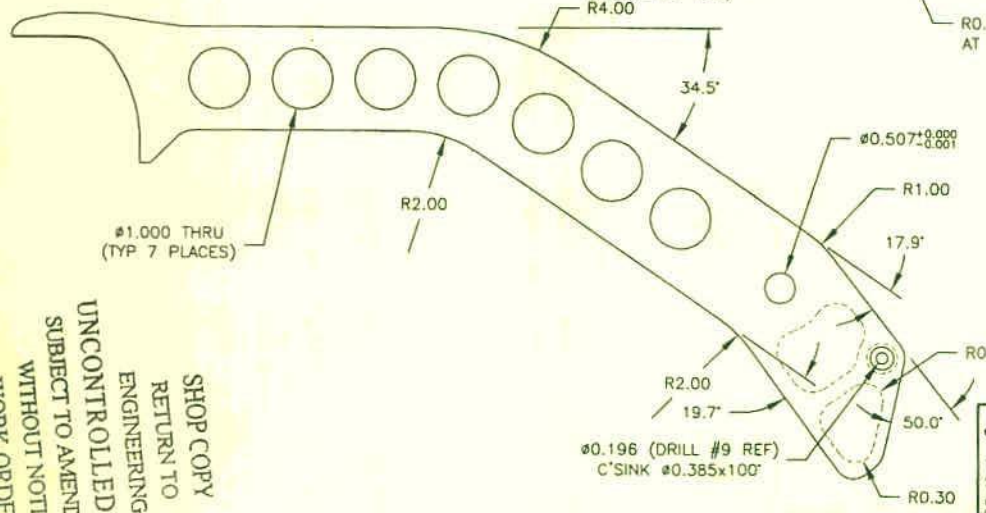

SECTION B-B
SCALE 1:1

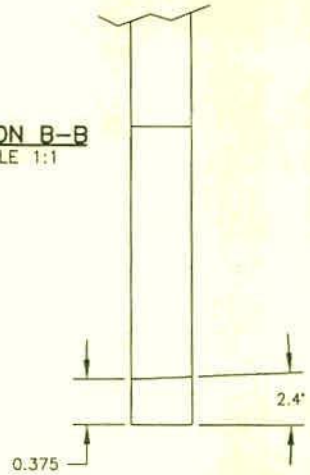

RELEASED
07.06.29

SHOP COPY
RETURN TO
ENGINEERING
UNCONTROLLED COPY
SUBJECT TO AMENDMENT
WITHOUT NOTICE
WORK ORDER
NO. 34477

DESIGN GP	DRAWN BY GP	DART	DART AEROSPACE LTD. HAWKESBURY, ONTARIO, CANADA
CHECKED	APPROVED	DRAWING NO. D3560	REV. C SHEET 2 OF 3
DATE 07.06.19		TITLE ARM WELDMENT	SCALE 1:2

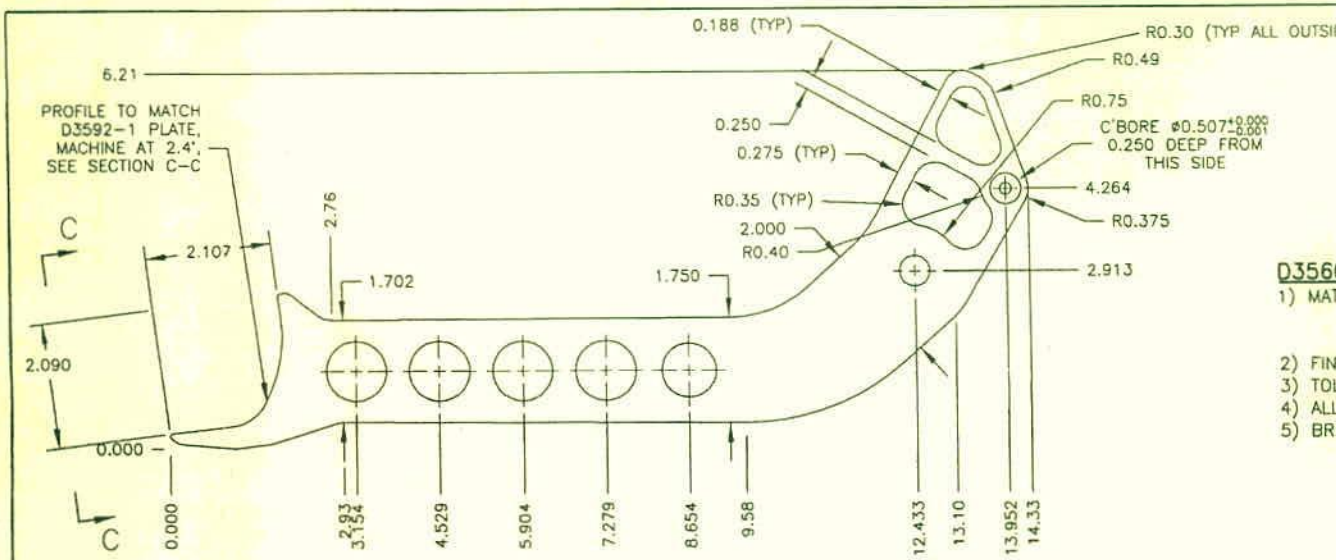

D3560-3 ARM (SHOWN), D3560-4 ARM (OPPOSITE)

1) MATERIAL: 6061-T6 ALUMINUM, 0.500 THICK (QQ-A-200/8 OR QQ-A-250/11, REF DART SPEC. M6061T6B0.500)
2) FINISH: NONE
3) TOLERANCES ARE PER DART QSI 018 UNLESS OTHERWISE NOTED
4) ALL DIMENSIONS ARE IN INCHES
5) BREAK ALL SHARP CORNERS 0.005 TO 0.015

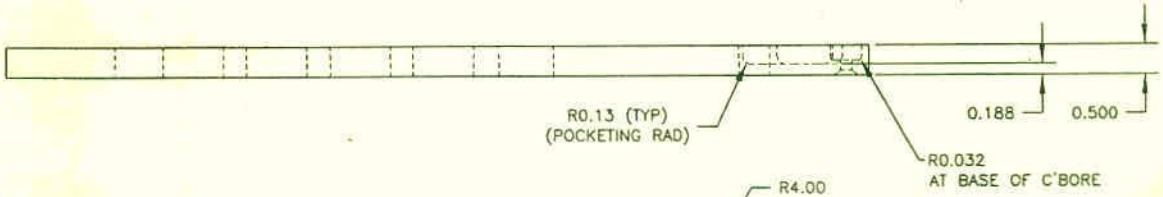

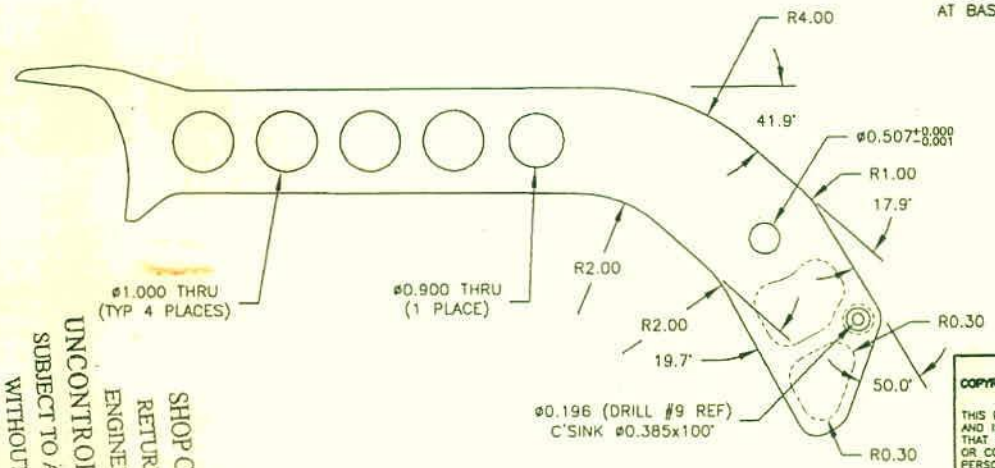

SECTION C-C
VIEW ROTATED
SCALE 1:1

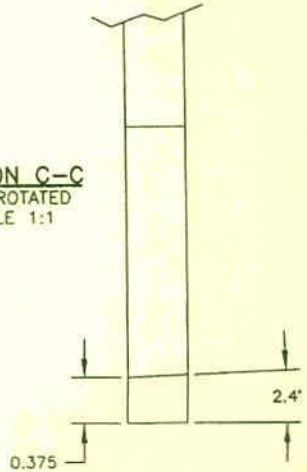

RELEASED 07.06.19

SHOP COPY
RETURN TO
ENGINEERING
UNCONTROLLED COPY
SUBJECT TO AMENDMENT
WITHOUT NOTICE
WORK ORDER
NO. 344427

DESIGN	DRAWN BY	DART	DART AEROSPACE LTD. HAWKESBURY, ONTARIO, CANADA
CHECKED	APPROVED	DRAWING NO. D3560	REV. C SHEET 3 OF 3
DATE 07.06.19		TITLE ARM WELDMENT	SCALE 1:2